Umeå School of Business
Umeå University

Influence strategies in shareholder engagement: A case study of five Swedish national pension funds

2010 PRI Academic Conference

Mainstreaming Responsible Investment

Ian Hamilton, PhD Candidate
Umeå School of Business
Sustainable Investment Research Platform (www.sirp.se)

FUNDED BY MISTRA

ESG Directive

"Considerations shall be given to ethics and the environment without compromising the overall goal of attaining a high return."

Interpretation & formulation of ESG directive
Article #1

Influence strategies in shareholder engagement
Article #2

AP Fund influence and ESG main-streaming of inst. investors
Article #3

FUNDED BY MISTRA

Introduction.

Purpose of paper

- Limited knowledge on how pension funds choose between engagement, divestment, or other forms of influencing strategies. (Gifford, 2009b; Sjöström, 2010)

- We look at influence strategies and develop a framework for for describing and analyzing the approach taken by pension funds to influence as active owners.

Research context.

- The Swedish pension scheme (2001) is self-financed and independent from the national budget.
- *'Pay-as-you-go'* system, pension contributions paid in every month are disbursed to cover current income pension benefits.
- The purpose of buffer funds is to cushion temporary fluctuations in contributions and disbursements.

Research context.

The Swedish Pension System

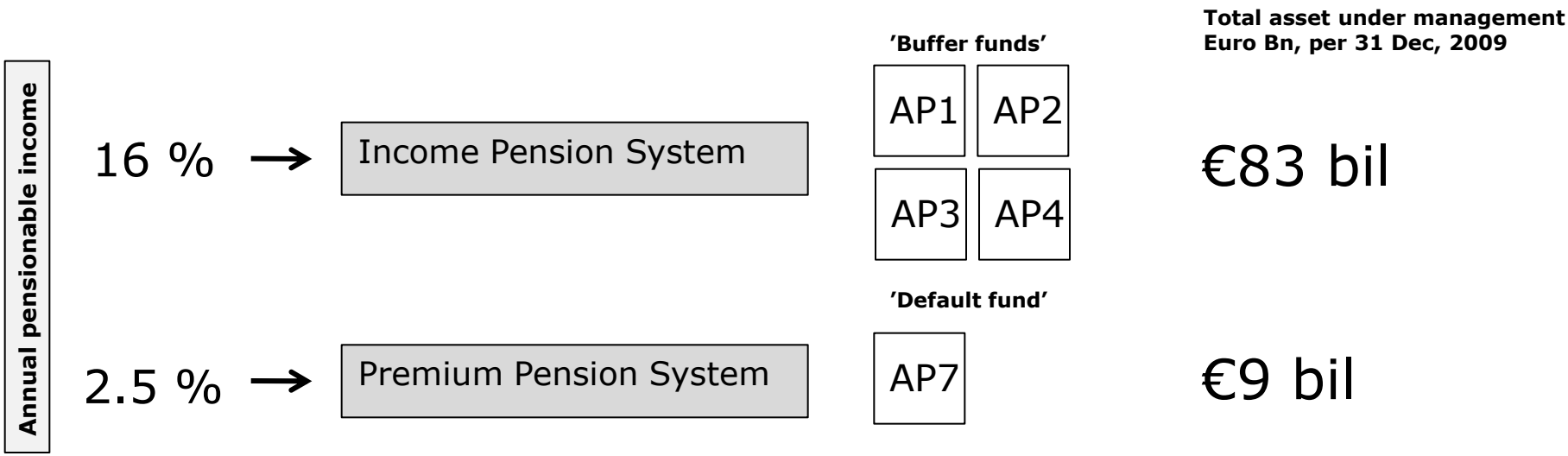

Umeå School of Business
Umeå University

Research context.

Investment rules and mandates (AP funds)	'AP1, AP2, AP3, AP4'	'AP 7'
ESG considerations	- YES	- YES - NO voting rights for Swedish shares
Internal & External Investment management	- YES	- YES
Investment rules	- All instruments on the capital market	- Mainly shares
Board members	- Appointed by the Government (in total 9) - Four members appointed by social partners	- Appointed by the Government (9) - No members are nominated by social partners.
Competition	- YES, four (4) AP funds	- YES, 800 mutual funds

Theory.

- Stakeholder theory argues that managers of firms have obligations not only to shareholders (Freeman, 1984).
- Stakeholder research has focused on who a firm's stakeholders are and the type of influence they exert (McGee, 1998).
- Stakeholder identification and why managers should pay attention to and prioritise certain stakeholders (Mitchell, Agle, and Wood, 1997)
- The literature on stakeholder influencing strategies builds on Frooman's (1999) model combining resource dependence, exchange and stakeholder theories.
- The research on influencing strategies is emerging and Frooman's early work has been expanded upon (Gifford, 2009; Hendry, 2005; Mattingly and Greening, 2002)

Methodology.

- Exploratory case study approach – semi structured interviews
- Interviews occurred between January 2007 – April 2008
- 23 AP fund interviews (Chairman, CEO, Corp Gov, Inv mgrs)
- 17 Stakeholder interviews
- Six step data analysis process (Creswell, 2009):
  1. Transcription
  2. Thematic labeling
  3. Coding process
  4. Individual & cross case analysis
  5. Conceptual model development
  6. Data sense making (theory extensions)

- Respondent validation: AP fund workshop December 2009

Findings/Discussion.

AP fund influence strategies and stakeholder audiences:

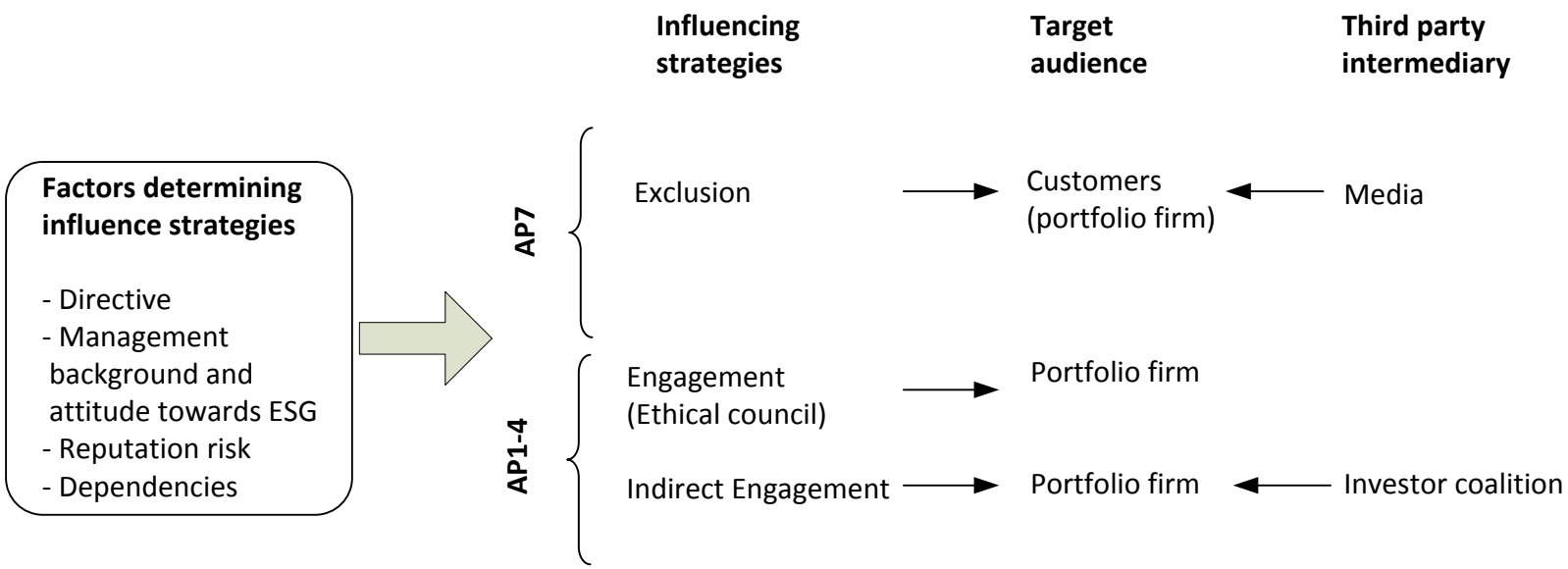

Discussion.

A model of AP fund influence strategies

Pathway of influence	Level of interaction: Low	Level of interaction: High
Direct	Exclusion	Engagement
Indirect	Proxy voting	Investor coalition

(adapted from Mattingly & Greening, 2002)